1. □□□□□□2□□□□□

2. □□□□□ □□□□□□-□□□□-□

□□□

[illegible]. [illegible]([illegible])[illegible]——[illegible].

1. [illegible].

2. □□□□□□□□□□□□□□□□□□□□□□(□)□.

□□□□□□□□□□□□□□□□□□□□□□□□□□□□□□□

□□□□□□□□□□□□.

3. □□□□ Q□CU□ΔQ□$C\Delta U$□□□□□□□□□□

.

□□□□□□□□□□□□□□ E □ 6 V □□□□□□□□□ C_1 □ 1 μF □

□□ C_2 □ 2 μF □□□ R_1 □ 4 Ω □□□ R_2 □ 2 Ω. □□

(1) □□□ S □□□□□□□□□

A □ B □□□□□□ U_{AB}

(2) □□ S □□□□□□□□□

□□□□□□□□□ C_1 □□□□□□□□□□ .

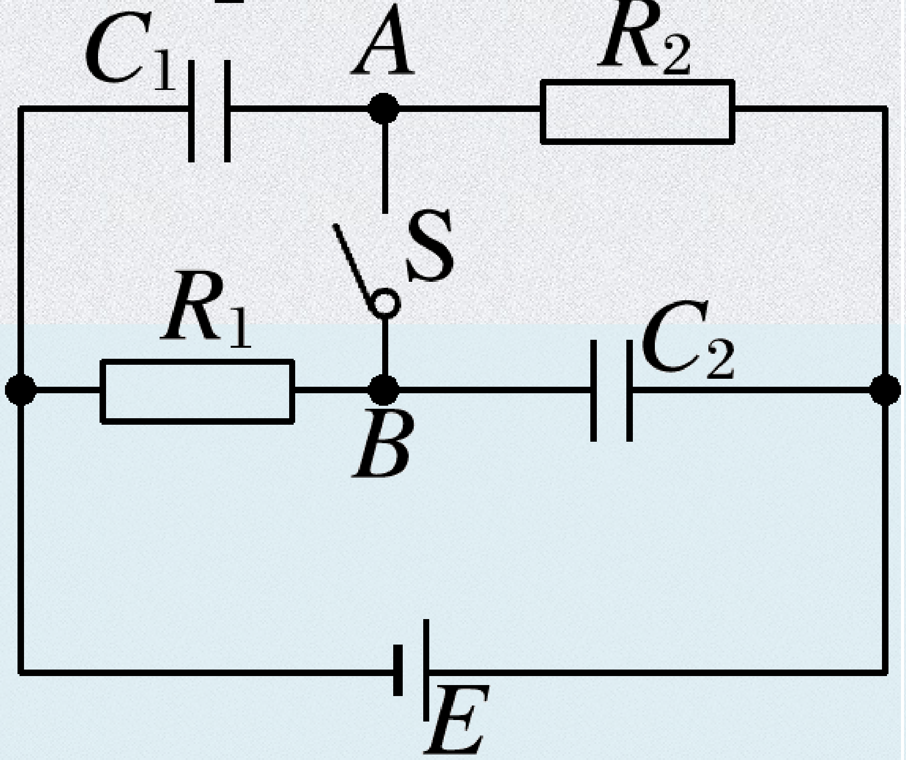

[illegible] (1) [illegible]——[illegible]
[illegible].(2) [illegible]
[illegible]
[illegible].

□ □□□□□□□□□□□□□□□□□□□□□□□□□□ U_{ad} □

5.0V □ U_{cd} □ 0 V □ U_{ab} □ 5.0 V □□□□□□□□

(　　　)

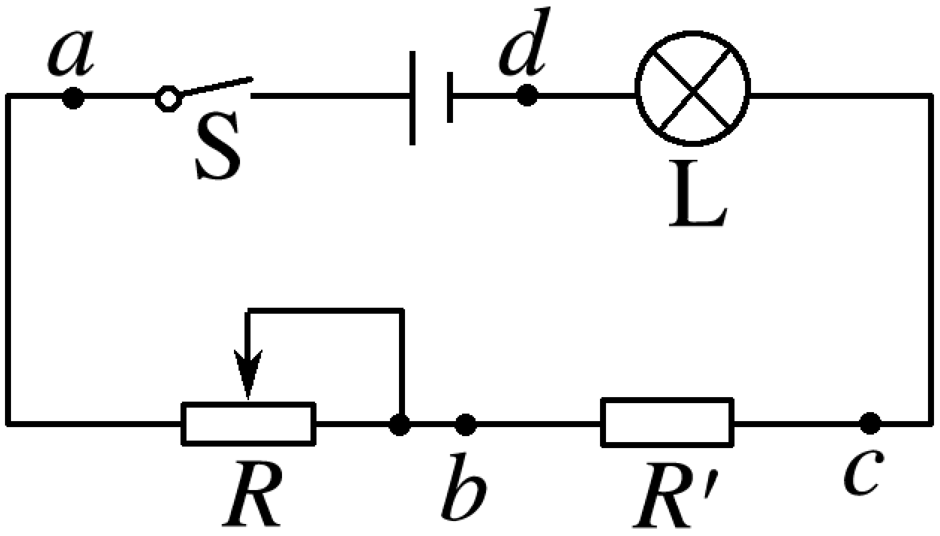

A.L □□　B.*R* □√□

C.*R′* □□　D.S □□

[illegible]

1. [illegible].

2. [illegible].

3. [illegible]

1. [illegible]____[illegible]“ 0” [illegible].

2. [illegible]

(1) [illegible]______.

(2) [illegible]______[illegible]

[illegible]

3. [illegible]

(1) [illegible]______.

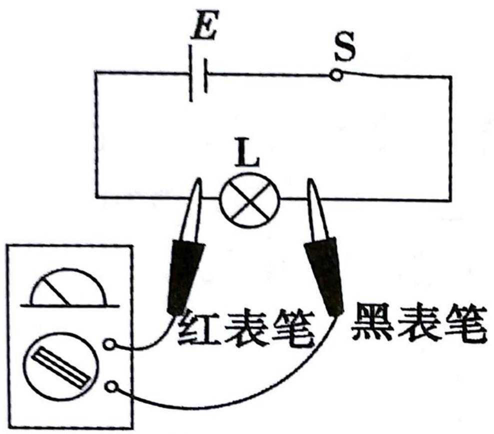

测量直流电压

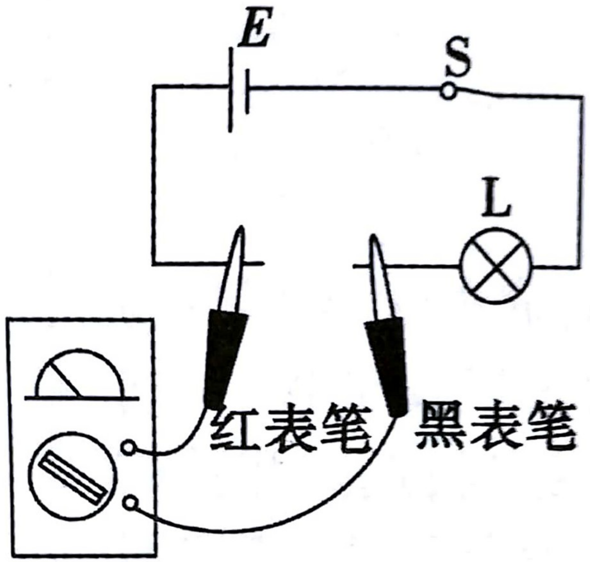

测量直流电流

(2) [illegible]______[illegible]________[illegible].

4. [illegible]

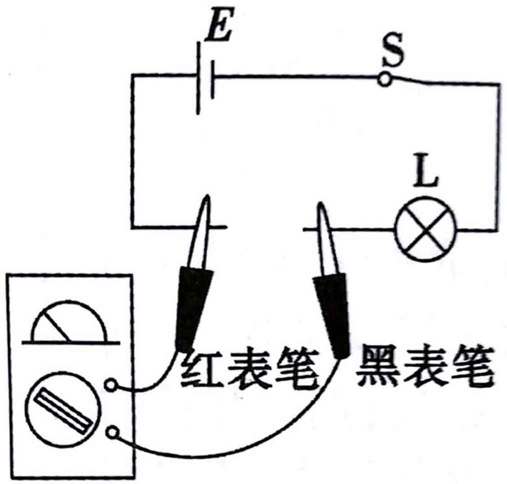

测量直流电流

(1) [illegible]

[illegible].

(2) [illegible]____________[illegible]

(3) [illegible]. [illegible]

[illegible] 0

➢ [illegible]

[illegible]“[illegible]”[illegible]“[illegible]”[illegible].

(1) [illegible].

(2) [illegible]“[illegible]”.

(3) [illegible]“[illegible]”.

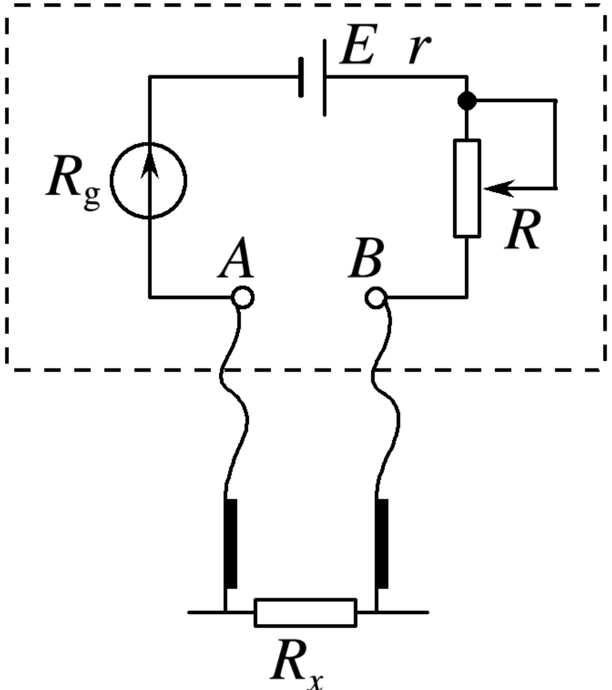

(4) □□□□□□□□ (1)(2)(3). □□□□□□□□□□□□□□□□□□

(5) □□□□□□□□□□□□□□□□□□□□□□□□□“______”□□ OFF

□□ ________ □□□□□□□□□□□□□□□□□□□□.

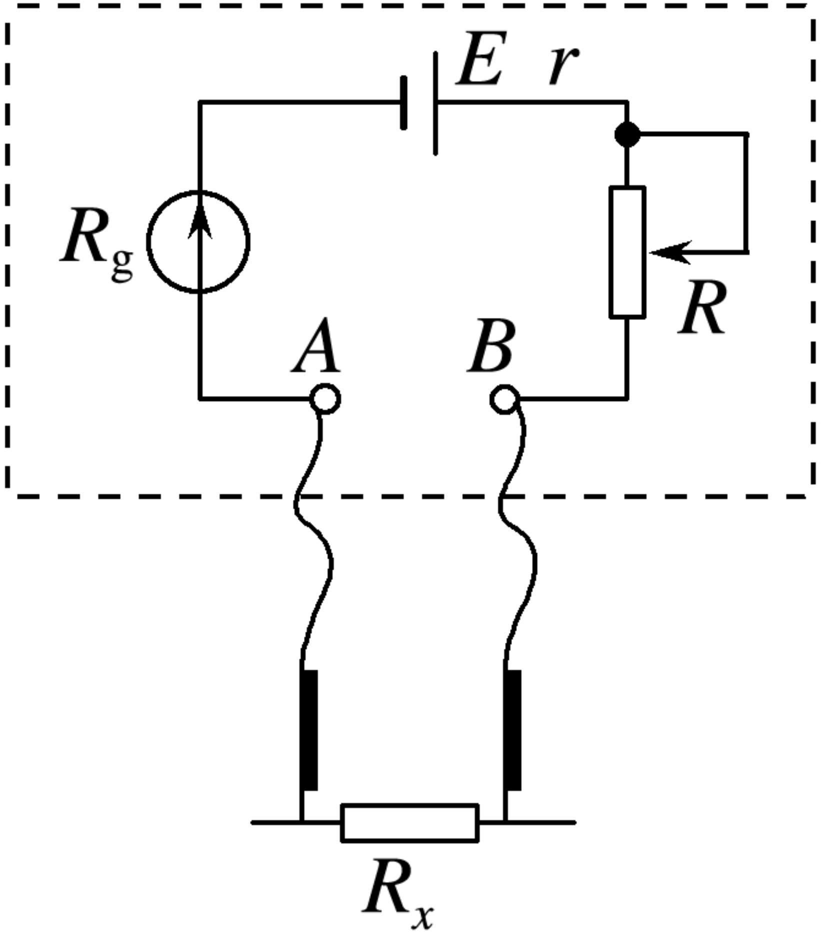

(1) I [illegible] R_x [illegible]

(2) [illegible] ([illegible] "∞" [illegible]) [illegible].

(3) [illegible] R_x [illegible] r [illegible] R_g [illegible] R [illegible] $I = \frac{E}{R_x + R + R_g + r} = \frac{1}{2}I_g$ [illegible]

[illegible].

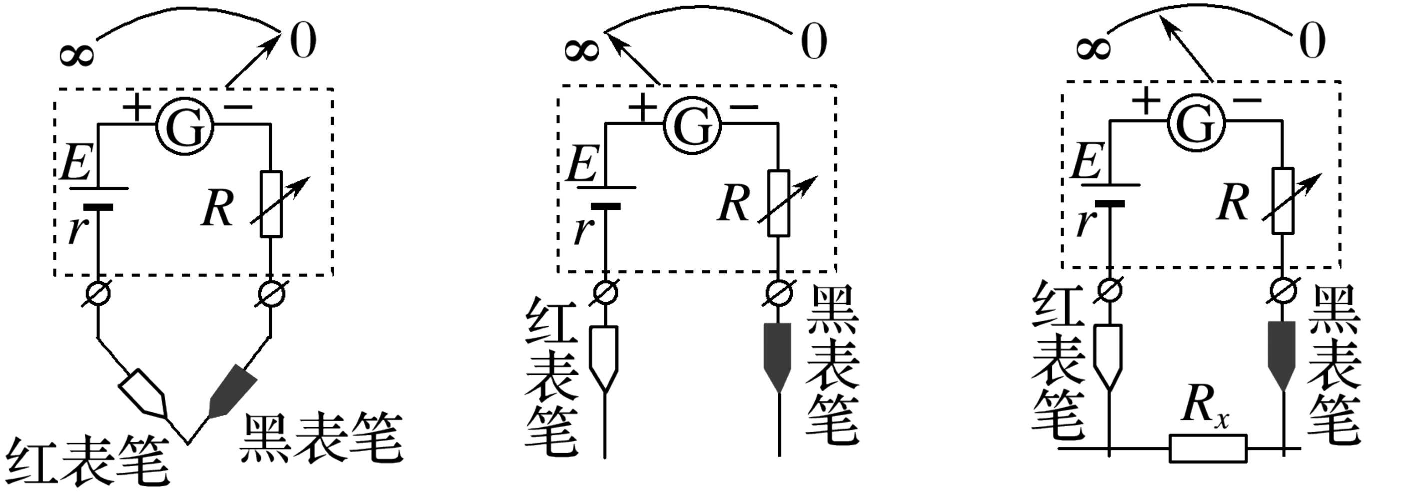

甲　　乙　　丙

(1) [illegible]

① [illegible]

② [illegible].

③ [illegible]

④ [illegible]

⑤ [illegible]

(2) [illegible].

□　□□□□□□□□□□□□□ . □□□□□□“ ×100” □□□□□□□□□□□□□□□□□□□□□□

$1.5\times10^{3}\Omega$

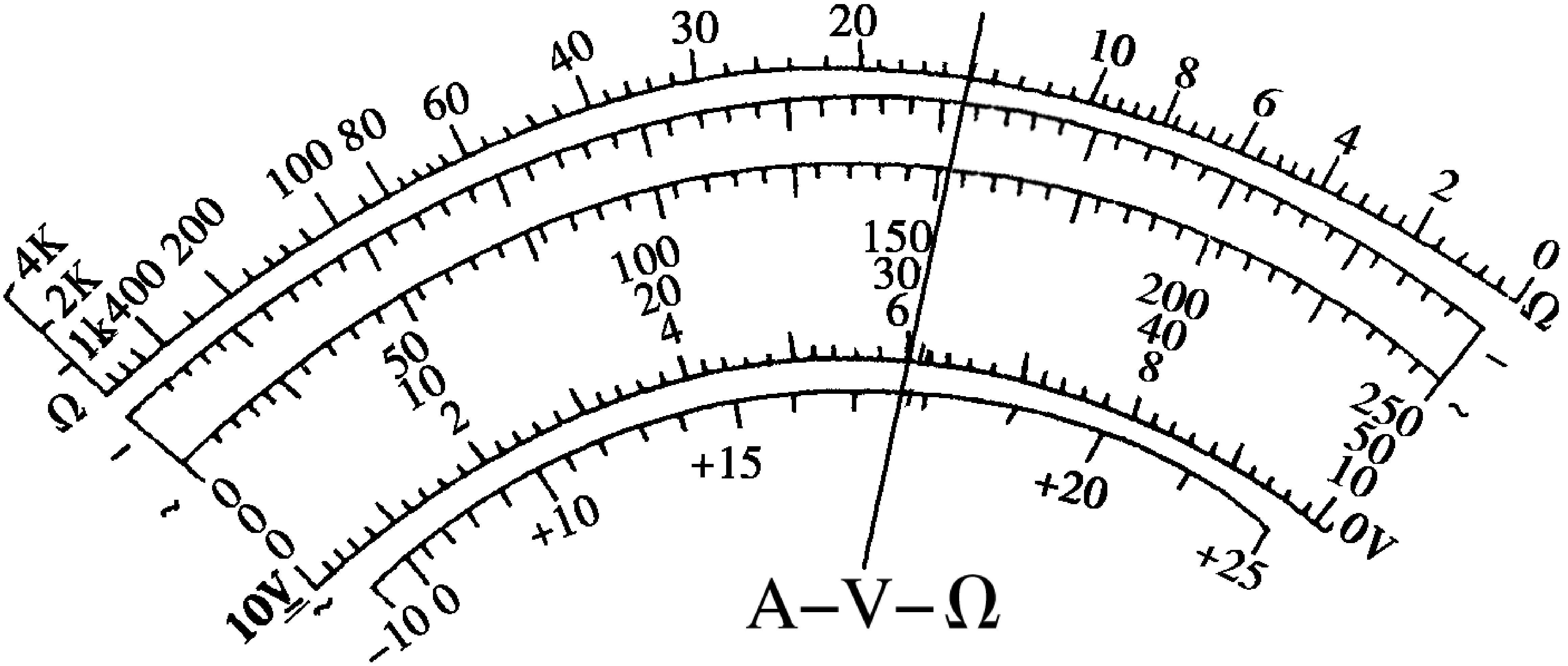

(2) □□□□□□□□□□□□□□□□□□□50 mA □□□□□□□□□□□□□□□□□□□□□□□□□□□

□□________ mA □□□□□□□□250 mA □□□□□□□□□□□□□□□□□□□□□□□□□□

□□□________ mA.

30.4(30.3 □ 30.5 □□□)　151-153

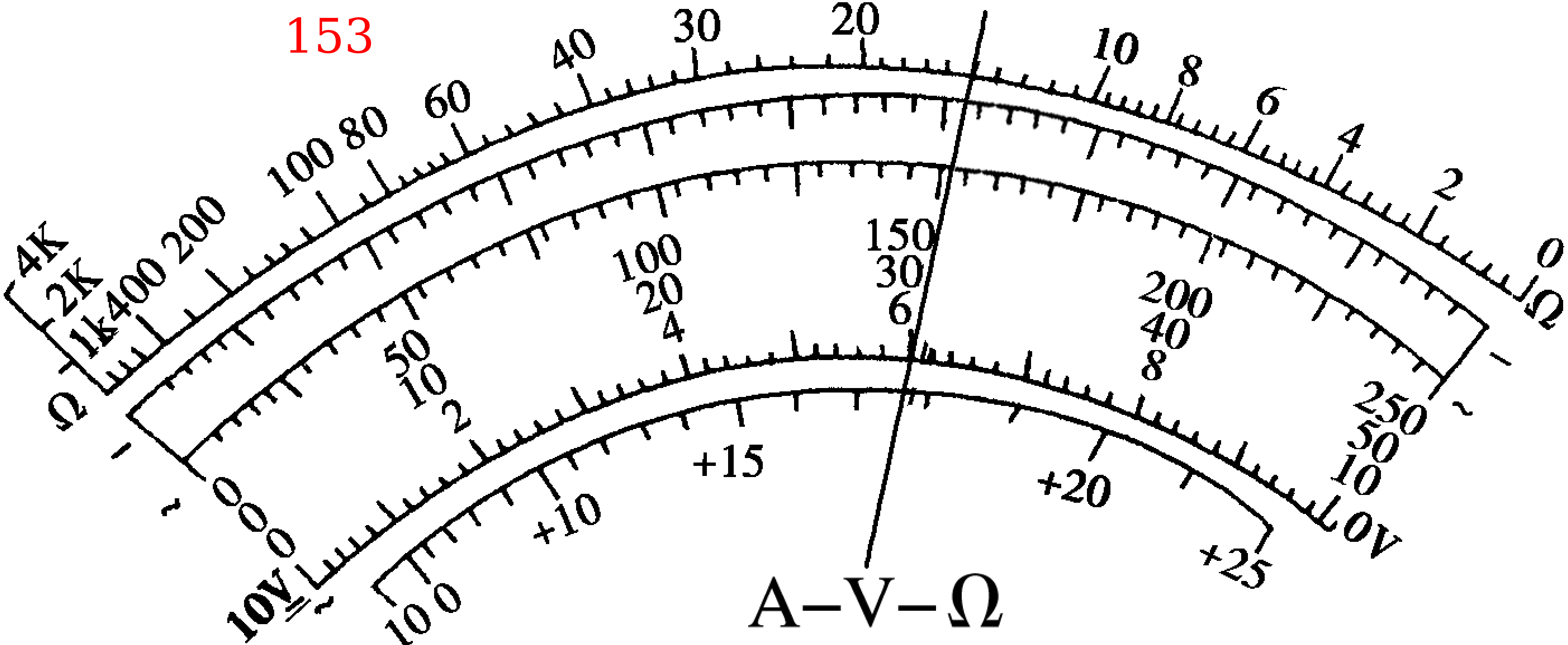

[illegible]

1. [illegible] [illegible]________[illegible]__[illegible]____[illegible].

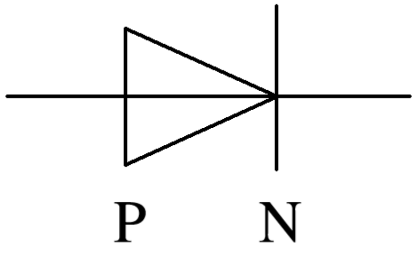

2. [illegible]______(Ⅹ“[illegible]”Ⅹ“[illegible]”)[illegible]______(Ⅹ“[illegible]”Ⅹ“[illegible]”).

[illegible] [illegible]. [illegible]

(1) [illegible].

(2) [illegible].

(3) [illegible] ________ [illegible].

(4) [illegible] ________ [illegible] ________ [illegible].

(5) [illegible] ________ ([illegible]“[illegible]”[illegible]“[illegible]”[illegible]“[illegible]”) [illegible] (3) [illegible] (4).

(6) [illegible] ________ [illegible].

□□□□A□B□C□□□□□□□□□□□□□

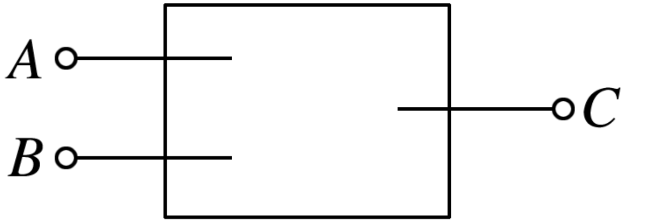

□□□□□□□□□□□□□□□□□□□□□□

□□□□□□.□□□□□□□□□□□□□□□□

□□□□□□□□□□□__________□□□□□□□□□□□□□.□□□□□□□□□□□□□□□□□□

□□□□□□□□B□□□□□□C□□□□□□□□□□□□□□A□B□□□□□□□□□□R□

□□□□A□□□□□□C□□□□□AB□□□R□□.□□□□□□□.□□□□□□□□□□□□
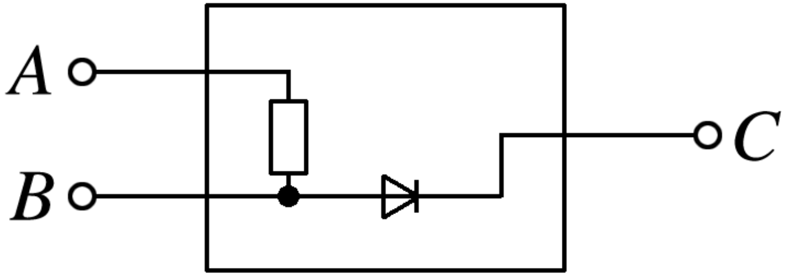
.